Liko
A Hill-Rom Company

UltraTwist™

Instruction Guide

English
7EN111103-02
2011-05-13

Applies to the following models:

UltraTwist Slim	Prod. No. 3126045
UltraTwist Wide	Prod. No. 3126047

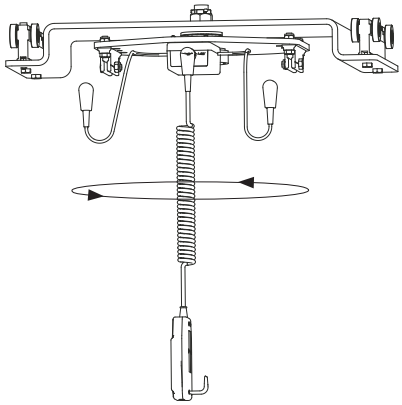

UltraTwist Slim

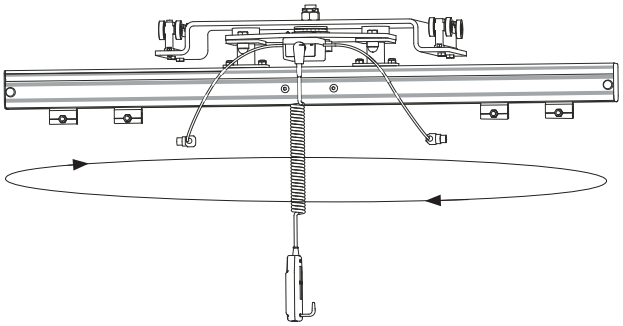

UltraTwist Wide

Product Description

Lifting heavy patients requires special lifting techniques and specially designed lifting accessories. UltraTwin is the name of Liko's system for lifting up to 500 kg (1100 lbs). The system is based on the use of two Likorall lift motors working together which also allows individual maneuvering that is helpful in positioning of the patient to upright, semi-reclined or lying position. Ultra Twist is an accessory to the UltraTwin system, which facilitates 360º rotation of the patient and gives great advantage to transfers from bed, lifting to gurney, ambulation or when used in confined spaces etc. Ultra Twist is available in two versions (Wide and Slim), to suit different lifting needs.

UltraTwist Slim and UltraTwist Wide can be used with sling bars for transfers in seated position, e.g. between bed and wheelchair or to/from the toilet. UltraTwist Wide can also be used with stretchers for horizontal transfers of the patient, e.g., in surgery or X-ray situations.
For lifting of heavy patients Liko offers a wide range of specially designed lifting accessories.

For current product information, please refer to our website, www.liko.com. Instruction guides are also available on the website for downloading, free of charge.

In this document, the person being transferred is referred to as the patient and the person helping them is referred to as the caregiver.

△ **Caution triangles are used to warn of situations that demand extra care and attention.**

IMPORTANT!
Read the instructions for both the patient lift and the lifting accessories before use. Lifting and transferring a patient always involves a degree of risk. A complete understanding of the contents of instructions is essential, and only trained personnel should use the equipment. Please contact your Liko/Hill-Rom representative in the event of any uncertainties or questions.

Table of Contents

Safety Instructions 2
Technical Data 2
Maximum Load 2
Measurement 3
Definitions 3
Recommended accesories 4
Operation 4
From bed to chair/wheelchair with UltraTwist Slim 5
From bed to chair/wheelchair with UltraTwist Wide 6
Lifting with a stretcher on UltraTwist Wide 7
Inspection and Maintenance 8

⚠ **NOTE!** This instruction guide contains important information about the use of the product.
All personnel who use this product must be thoroughly familiar with the contents of this instruction guide.
Remember to keep the instructions where they are easily accessible for users of the product.

Safety Instructions

⚠ **UltraTwist must always be assembled by an authorized technician; see current installation instructions.**

Before using the product, make certain that:
- lifting accessories are properly connected to the lift;
- the batteries have been charged for at least 8 hours;
- you have read the instruction guides for: UltraTwist, Likorall lift motor and for the lifting accessories to be used;
- personnel using these products have received appropriate instructions and training regarding handling of both the lift and the accesories;
- the correct lifting accessory has been chosen, with respect to the type, size, material and design in relation to the needs of the patient.

Before lifting, always ensure that:
- plan the lifting and transfer operation carefully, so the patient is as comfortable and secure as possible;
- identify which of the lift motors is controlled with the single arrows on the hand control. Make sure that this motor lift at the head end of a stretcher (marked with a head symbol), alternatively, the wider of the two sling bars;
- ensure that wheels/castors on the bed, gurney, etc. are locked during the lifting operation;
- the lift strap is not twisted or worn and can be run freely in and out of the lift motor;
- lifting accessories are not damaged;
- the sling/lift sheet is correctly and securely applied to the patient, so that there is no risk of personal injury
- the lifting accessory is correctly applied to the lift;
- the sling's/lift sheet's strap loops are correctly applied to the sling bar hooks when the sling's/lift sheet's straps are extended, but before the patient is lifted from the underlying surface.

⚠ **Never leave a patient unattended during a transfer situation!**

CE UltraTwist comply with the requirements of the directive for Class 1 medical-technical products (MDD 93/42/EEC).

Technical Data

Weight: 18.7 kg (41 lbs) - Ultra Twist Slim (excl. lift motors)
24.5 kg (54 lbs) - Ultra Twist Wide (excl. lift motors)

Max. load: 500 kg (1100 lbs)

Material (casing): Aluminium and steel

The device is intended for indoor use.

Maximum Load

To maintain the 500 kg (1100 lbs) max. load rating, two Likorall 250 ES lift units are used. It is also essential that the accessories that are used are intended for the same max. load or greater. If an accessory with a lower max. load rating is used, the entire system's max. load is reduced to this weight. Read the label on the lifting accessory, or contact your Liko/Hill-Rom representative.

Measurements

Ultra Twist Slim Prod. no. 3126045

A: 542 mm (21.3 inch.)
B: 305 mm (12.0 inch.)
C: 500 mm (19.7 inch.)
D: 104 mm (4.1 inch.)
E: 270 mm (10.6 inch.)

H: 16 mm (0.6 inch.)

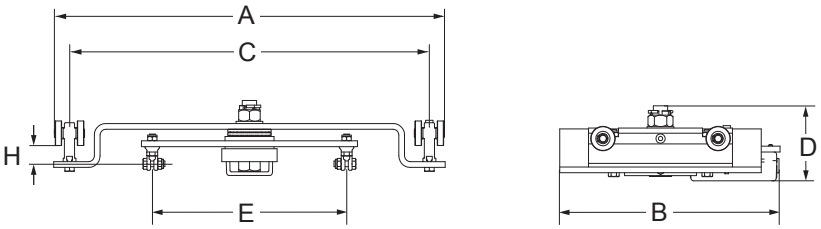

Ultra Twist Wide Prod. no. 3126047

A: 1130 mm (44.5 inch.)
B: 544 mm (21.4 inch.)
C: 500 mm (19.7 inch.)
D: 27 mm (1.1 inch.)
E: 306 mm (12.5 inch.)
F: 184 mm (7.2 inch.)

H: 141 mm (5.7 inch.)

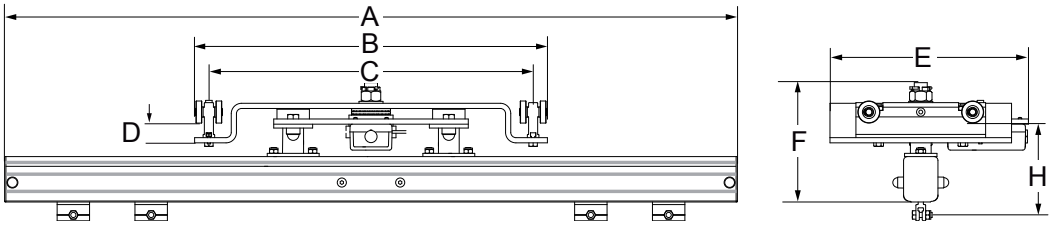

Definitions

Ultra Twist Slim (with Likorall lift motors)

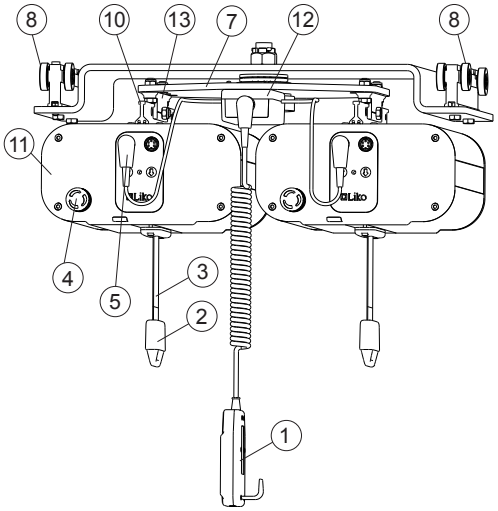

1. HandControl UT
2. Q-Link
3. Lift strap
4. Emergency stop
5. Manoeuvre contact
6. Carriage (pair)
7. Rotation plate (360º)
8. Wheel set
9. Rail H70
10. Mounting rail
11. Lift motor (Likorall)
12. Connection box
13. Mounting bracket

Ultra Twist Wide (with Likorall lift motors)

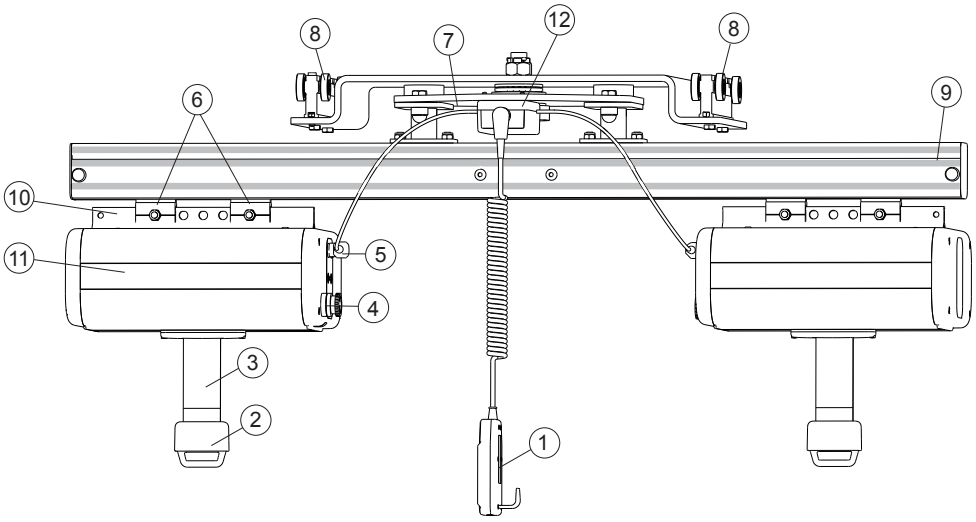

Recommended accessories

△ Using lifting accessories other than those approved can entail a risk.

Below, we present recommended sling bars and accessories for use with UltraTwist systems.
For choice of appropriate slings and other accessories, consult our brochure *"Lifting Accessories"*.
For further guidance, study the instruction guide for the respective sling model. Contact your Liko/Hill-Rom representative or visit www.liko.com for advice and information on new products in Liko's range.

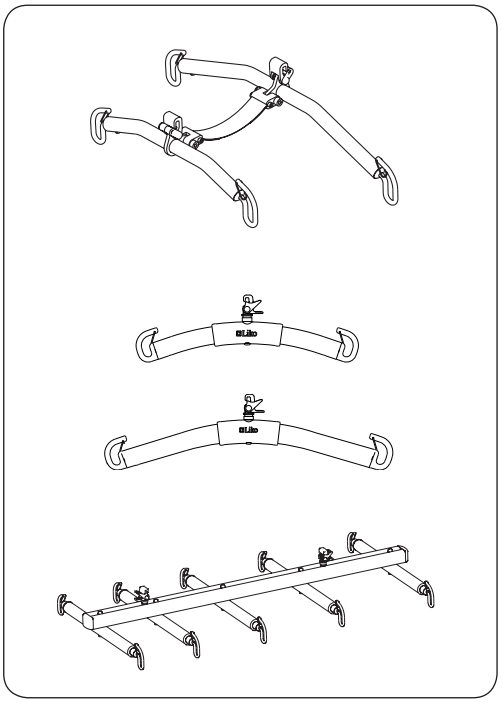

UltraTwist Slim – lifting in a seated position

For UltraTwist Slim, we recommend Ultra SlingBar (Prod. No. 3103603). It consists of two sling bars of different widths, connected by a strap. The wider of the two sling bars is intended for use with the sling's upper strap loops and the narrower sling bar is to be used with the leg support´s strap loops.

△ Load must be applied to all four hooks during lifting.

UltraTwist Wide – lifting in a seated position

For UltraTwist Wide, we recommend Universal SlingBar 450 (Prod. No. 3156085) together with Universal SlingBar 600 (Prod. No. 3156086). The wider of the two sling bars is intended for use with the sling's upper strap loops and the narrower sling bar is to be used with the leg support´s strap loops.

△ Load must be applied to all four hooks during lifting.

UltraTwist Wide – horizontal lifting

For horizontal lifting, we recommend UltraStretch (Prod. No. 3156058). This can be used with a full lift sheet (Prod. No. 3684105-106) or with lift straps (Prod. No. 3684100), see the instruction guide for UltraStretch.

Operation

HandControl UT (included with UltraTwist)

Controls both lift motors: Up Down
Controls one of the lift motors: Up Down

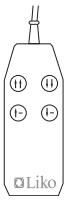

Charging
The lift motor batteries are charged via the hand control. One battery charger (accessory) is sufficient for the entire system if HandControl UT is used. For complete charging instructions, see the instruction guide for the respective lift motor.

From bed to chair/wheelchair with UltraTwist Slim

Before starting the lifting operation it is important to ensure that the sling bars are properly connected to the lift motor´s lift straps. We recommend the use of Ultra SlingBar with UltraTwist Slim. The purpose of the strap connecting the two components of the Ultra SlingBar is mainly to prevent the patient from tilting excessively and it should not be removed. Below, we illustrate a transfer from bed to wheelchair using Ultra SlingBar and Original HighBack Sling Mod. 20 alt. 26.

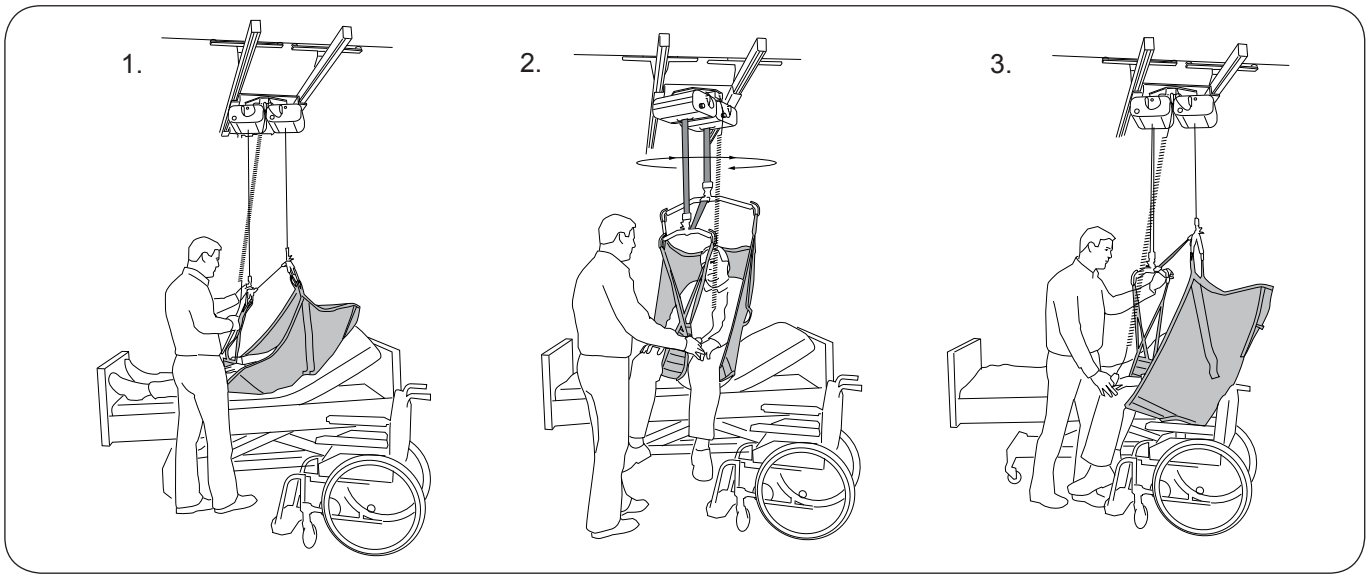

1. Apply the sling as described in the instruction guide. Before the patient is lifted from the underlying surface, but when the straps are properly extended, it is important to ensure that the straps are correctly attached to the sling bars. In conjunction with lifting, use the bed's raising and lowering functions.
   For advice on how to regulate the patient's sitting posture, see below.

   △ **When lifting, always lift with both lift motor´s!**

2. Placement of the patient in a chair is facilitated by UltraTwist's rotation function. Grasp the sling bars, sling and/or the patient's legs/knees and rotate to the desired position.

3. Guide the patient toward the chair. Lower the patient.

Adjusting the patient's sitting posture (leaning in a seated position)

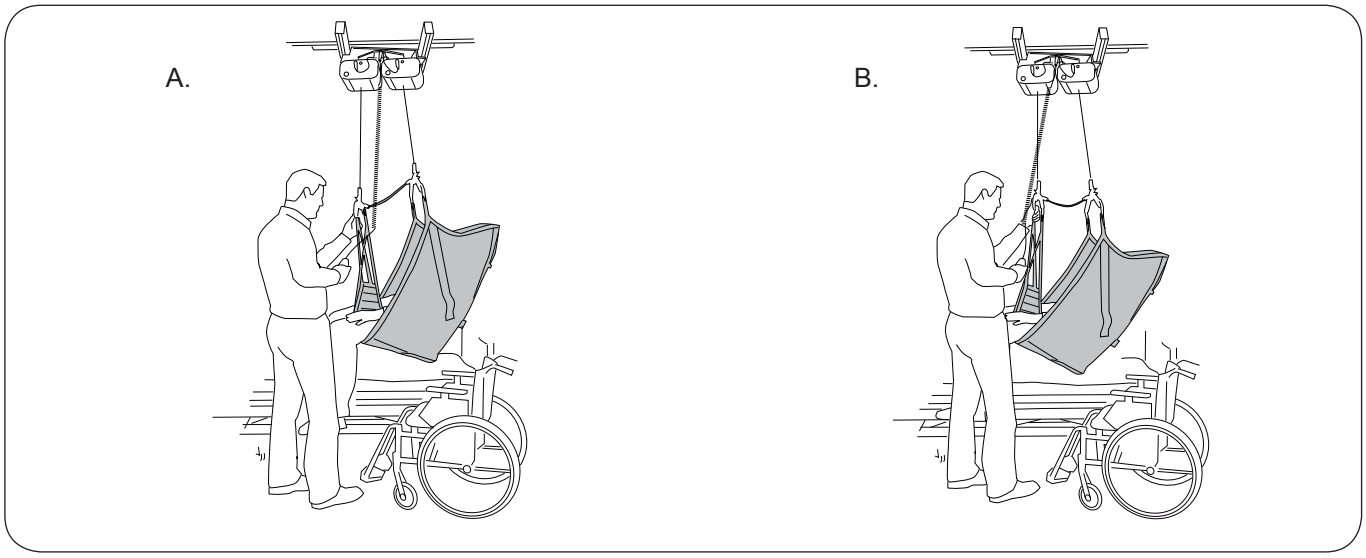

By raising or lowering only one of the two lift strap´s you may adjust the patient in position for a comfortable and secure transfer. Seat the patient in a more upright position (A) when transferring to a chair, and seat the patient in a more reclined posture (B) when transferring to a bed. The patient's sitting posture is manouvered via the lower buttons (single arrows) on the HandControl UT, or with the hand control that manouvers the lift motor which lifts the upper body.

From bed to chair/wheelchair with UltraTwist Wide

Before starting the lifting operation it is important to ensure that the sling bars are properly connected to each lift motor´s lift strap. Recommended sling bars for UltraTwist Wide: Universal SlingBar 600 and Universal SlingBar 450. Universal SlingBar 600 is intended for the sling's upper strap loops and is connected to the lift strap that is manouvered via the lower buttons on the hand control. Universal SlingBar 450 is intended for the leg support´s strap loops. Below, we illustrate a transfer from bed to wheelchair using the above-mentioned sling bars and an Original HighBack Sling Mod. 20 alt. 26.

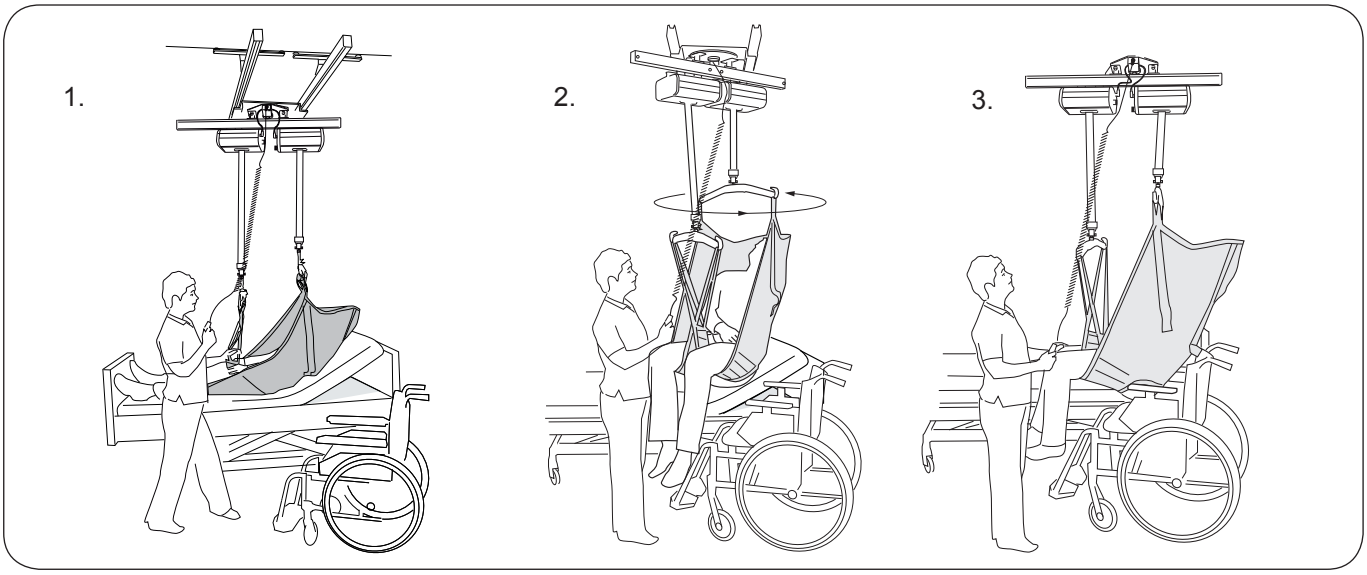

1. Apply the sling as described in the instruction guide. Before the patient is lifted from the underlying surface, but when the straps are properly extended, it is important to ensure that the straps are correctly attached to the sling bar. In conjunction with lifting, use the bed's raising and lowering functions. For advice on how to regulate the patient's sitting posture, see below.

   △ **When lifting, always lift with both lift motor´s!**

2. Placement of the patient in a chair is facilitated by UltraTwist's rotation function. Grasp the sling bars, sling and/or the patient's legs/knees and rotate to the desired position.

3. Guide the patient toward the chair. Lower the patient.

Adjusting the patient's sitting posture (leaning in a seated position)

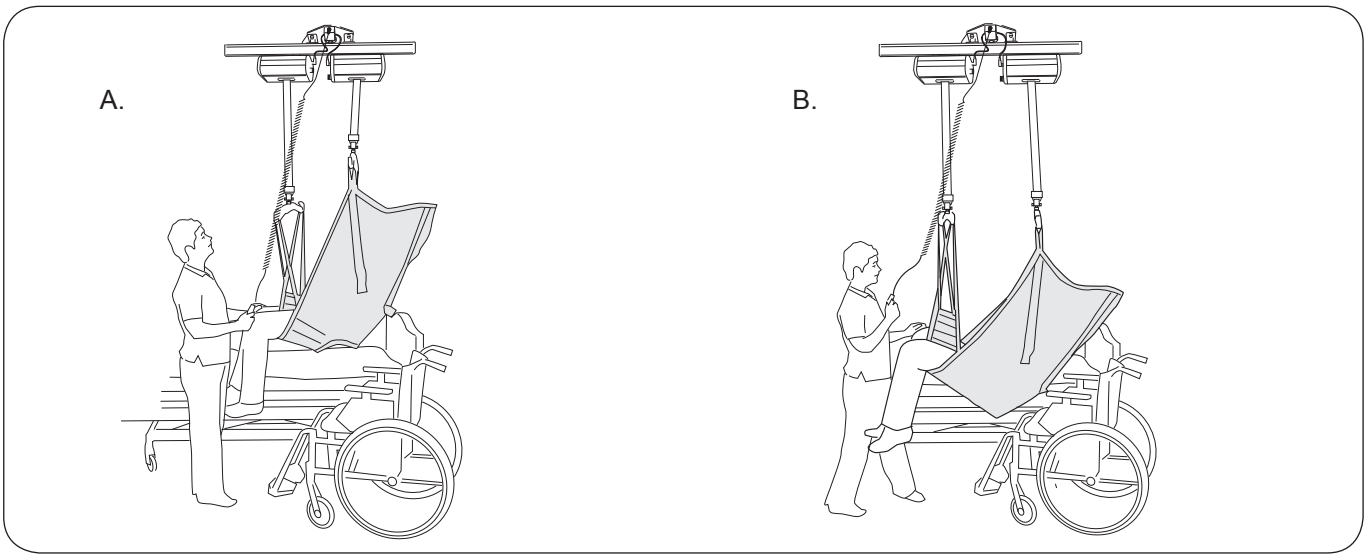

By raising or lowering only one of the two lift strap´s you may adjust the patient in position for a comfortable and secure transfer. Seat the patient in a more upright position (A) when transferring to a chair, and seat the patient in a more reclined posture (B) when transferring to a bed. The patient's sitting posture is manouvered via the lower buttons (single arrows) on the HandControl UT, or with the hand control that manouvers the lift motor which lifts the upper body.

Lifting with a stretcher on UltraTwist Wide

UltraTwist Wide should be used when lifting with a stretcher. We recommend the use of UltraStretch (see page 4). Below, lifting with UltraStretch and LiftSheet XL is illustrated. Carefully study the instruction guides for the accessories used.

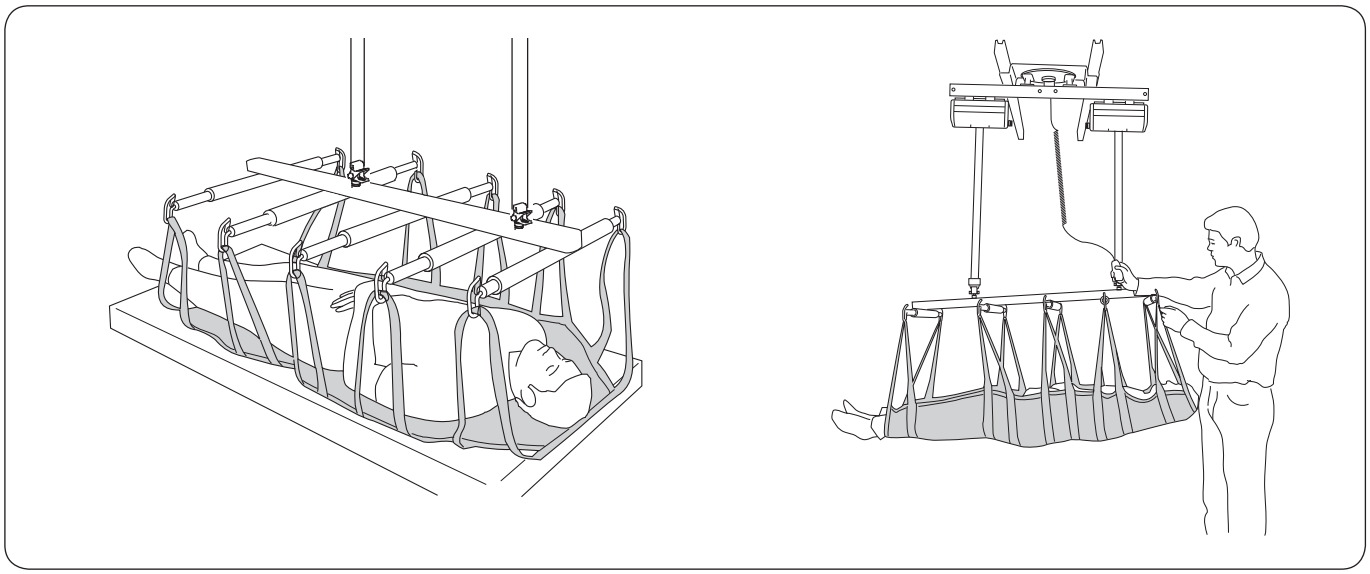

1. Apply the lift sheet as described in the instruction guide. Guide the UltraStretch over the patient and lower to about half a metre above the bed. Hang all of the strap loops on the stretcher. Note that the stretcher has a head end and a foot end (see marking with head symbol).

   △ **Ensure that all strap loops are properly hooked when the straps are extended but before the patient is lifted from the underlying surface.**

   △ **When lifting, always lift with both lift motor´s!**

2. During lifting, check to ensure that the patient is resting in the desired position: fully prone or with the head slightly higher. If necessary, this can be regulated by raising or lowering one of the lift motors.

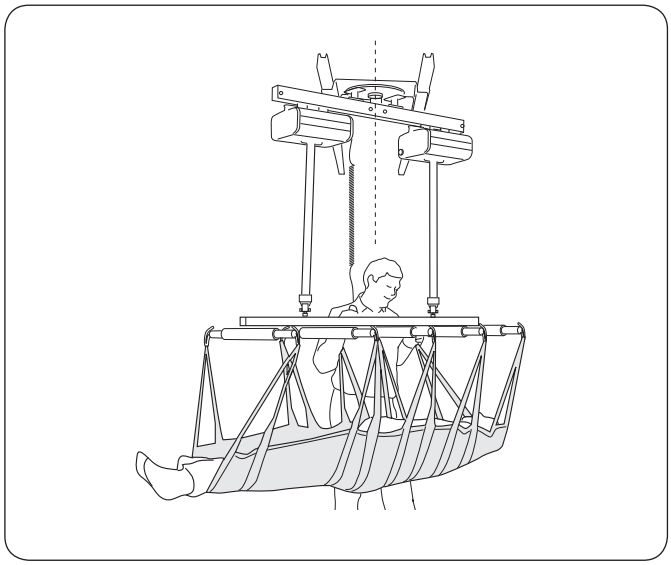

UltraTwist Wide can rotate 360º. This is a great advantage if you need to change bedding, lift to a stretcher or when lifting in confined spaces. Grasp the stretcher and rotate the patient to the desired position.

Inspection and Maintenance

Care and Maintenance

To ensure trouble-free operation, certain components should be checked each day the lift system is used.

- Check the lift system for any signs of external damage.
- Check carriage function.
- Check the sling bar's/stretcher's Quick-release Hook safety function.
- Ensure that all screws are tightened.

When necessary, clean the lift with a moist cloth, using warm water or disinfectant. **NOTE! Do not use cleaning agents that contain phenol or chlorine, since these can damage aluminium and plastic materials.**

⚠ **The lift should not be exposed to running water.**

Service

A periodic inspection of the UltraTwist should be carried out at least once a year.

⚠ **Periodic inspection, repair and maintenance may be performed only in accordance with the Liko service manual by personnel authorized by Liko and using original Liko spare parts.**

Service Agreement

Liko offers the opportunity to enter into service contracts for the maintenance and regular inspection of your Liko product.

Expected Life Time

The product has an expected life time of 10 years when correctly handled, serviced and periodically inspected in accordance with Liko's instructions.

Transport and Storage

The environment in which the product is transported and stored should have a temperature of 10–40 ˚C (50-104 °F) and a relative humidity of 30–75 %. The air pressure should be 700–1060 hPa.

Recycling

For instructions on how to recycle your Liko product, please visit our website: www.liko.com.

Product Changes

Liko's products undergo continuous development, which is why we reserve the right to make product changes without prior notice. Contact your Liko/Hill-Rom representative for advice and information about product upgrades.

Design and Quality by Liko in Sweden

Liko is quality-certified in accordance with ISO 9001 and its equivalent for the medical device industry, ISO 13485. Liko is also certified in accordance with environmental standard ISO 14001.

© Copyright Liko AB 2011-05

Liko
A Hill-Rom Company

www.liko.com

Manufacturer:
Liko AB
SE-975 92 Luleå
Sweden
info@liko.se