Liko
A Hill-Rom Company

Golvo™

Instruction Guide

English
7EN140107 Rev. 3

Applies to the following models:

Golvo 8000	Prod. No. 2000034
Golvo 8008	Prod. No. 2000035
Golvo 8008 LowBase™	Prod. No. 2000039

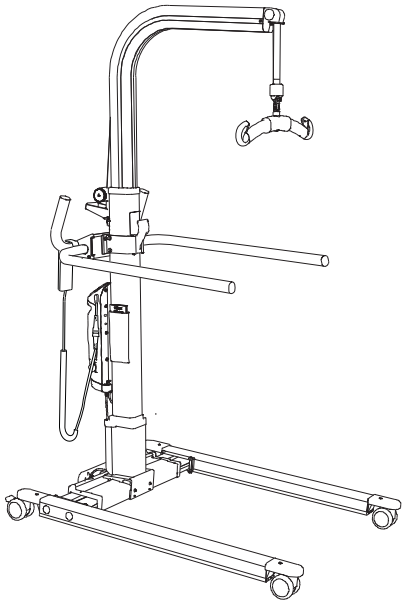

Golvo 8000/8008

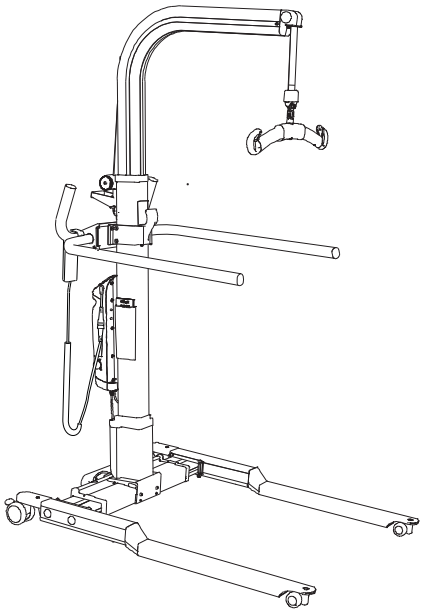

Golvo 8008 LowBase™

Product Description

Golvo 8000 and 8008 are advanced mobile lifts intended mainly for use in health care, intensive care, rehabilitation and habilitation. The models listed above differ in size and lifting height.

With a unique lift strap design and parallel widening of the legs, Golvo is an easy to use and flexible aid for daily transfers of adults and children, for instance, lifting to and from wheel chair, bed, toilet and floor, for stand and gait training, and transfer from car.
Service is facilitated by Liko Diagnostic System™, a monitoring system which continually registers operating data and indicates when the lift is in need of service.

The battery is of environmentally friendly NiMH type.

Golvo LowBase™ has a design with extra low base intended for use in combination with stretchers or other equipment where space for the lift base is limited.

Individual fitting of the sling and other lifting accessories to the patient is of the utmost importance for optimal performance and safety when using the lift

Horizontal lifting is also possible with any of the Liko stretchers.

△ is a warning triangle used for situations which require extra care and attention.

In this document, the person being lifted is referred to as the patient, and the person helping them is referred to as the caregiver.

IMPORTANT!
Read the instruction guide for both the patient lift and lifting accessories before use. Lifting and transferring a person always involves a certain level of risk. It is important to completely understand and adhere to the contents of the instruction guides. The equipment should only be used by trained personnel. Please contact your Liko/Hill-Rom representative in the event of any uncertainties or questions.

Table of Contents

Safety Instructions 2
Definitions 3
Technical Data 3
Dimensions 4
Assembly 5
Disassembly 7
Operation 8
Charging the Batteries 13
Maximum Load 14
Recommended Lifting Accessories 14
Simple Troubleshooting 17
Inspection and Maintenance 18

△ **NOTE!** This instruction guide contains important information for users of the product. All those who use the product should review and fully understand and adhere to the contents of the instruction guide. Remember to keep the instruction guide in a place where it is always available to those using the product.

Warning!
Certain environments and conditions can limit the correct use of the mobile lifts, including: thresholds, unlevel floor surfaces, various obstacles, and extra-thick carpets. These environments and conditions can cause the wheels of the mobile lift not to roll as intended, possible imbalance in the mobile lift, and increased exertion by the caregiver. If you are uncertain that your care environment fulfils the requirements for correct use of the mobile lift, please contact your Liko/Hill-Rom representative for further advice and assistance.

Safety Instructions

Before using <u>the first time</u> make sure that:
- the lift is assembled in accordance with the assembly instructions;
- the lifting accessory is properly attached to the lift;
- the batteries have been charged for at least 5 hours;
- you have read the instruction guides for the lift and lifting accessories;
- personnel using the lift are informed of the correct operation and use of the lift.

Before lifting, <u>always</u> make sure that:
- the lifting accessory is selected appropriately, in terms of type, size, material and design, with regard to the patient's needs;
- the lifting accessories are not damaged;
- the lifting accessory is correctly attached to the lift;
- the lift strap is not twisted or worn and can move in and out of the lift;
- the lifting accessory hangs vertically and can move freely;
- the lifting accessory is correctly and safely applied to the patient in order to prevent injuries;
- the latches are intact. Missing or damaged latches must always be replaced with new ones;
- the sling's strap loops are correctly connected to the sling bar hooks when the sling strap is extended but before the patient is lifted from the underlying surface.

△ **Unbalanced lifting poses a tipping risk and may damage the lift equipment!**

△ **Never leave a patient unattended during a lifting situation!**

Golvo 8000/8008/8008 LowBase™ have been tested by an accredited testing institute and fulfil the requirements specified in the Medical Device Directive for class 1 products (MDD 93/42/EEC).

Golvo 8000/8008/8008 LowBase™ comply with the requirements in EN ISO 10535:2006, IEC 60601-1, EN 60601-1-2, ANSI/AAMI ES60601-1 and CAN/CSA C22.2 no. 60601-1.

△ **The lift must not be modified under any circumstance. If you have any questions, please contact Liko/Hill-Rom.**

Particular care must be observed when using strong sources of potential disturbance, such as diathermy, etc, so that diathermy cables are not positioned on or near the lift. If you have questions, please consult the responsible assistive-device technician or the supplier.

The lift may not be used in areas where flammable mixtures may occur, for example, in areas where flammable goods are stored.

Definitions

Golvo 8000/8008

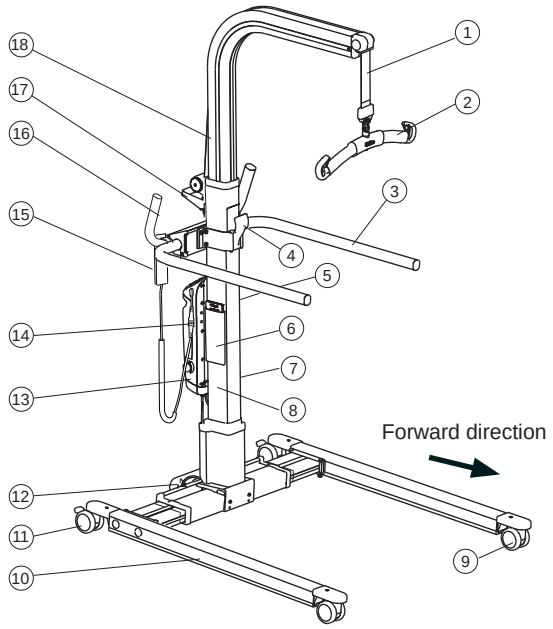

Golvo 8008 LowBase™

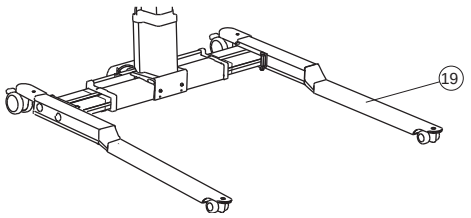

1. Lift Strap
2. Sling bar with latches
3. Retractable armrests
4. Parking panel for sling bar
5. Control box IR receiver
6. Holder for Quick Reference Guide and color code for sling sizes
7. Product decal
8. Mast with inbuilt motor
9. Front wheels
10. Base
11. Rear wheels with brakes
12. Motor for base-width adjustment
13. Control box with emergency stop built-in charger and peration panel (electrical emergency lowering/ raising)
14. Battery
15. Hand control
16. Handles
17. Emergency Lowering (mechanical)
18. Lift arm
19. Extra low base (Golvo LowBase)

Technical Data

Maximum load:	200 kg (440 lbs)
Material:	Anodised aluminium
Weight:	8000: 42 kg (92 lbs) 8008: 44 kg (97 lbs) 8008 LowBase: 46 kg (101 lbs) Heaviest removable part: 8000: 18 kg (40 lbs) 8008: 19 kg (42 lbs) 8008 LowBase: 21 kg (46 lbs)
Wheels:	Front: 75 mm* (3 in) twin wheels. *Golvo LowBase: 46 mm (1.8 in) twin wheels. Rear: 75 mm (3 in) twin wheels with brakes.
Turning diameter	Golvo 8000: 1240 mm (49 in) Golvo 8008: 1330 mm (52 in) Golvo 8008 LowBase: 1330 mm (52 in)
Emergency lowering device:	Mechanical and electrical
Lifting Speed no load	Two speeds; 41 mm/s (1.61 in/s) and 33 mm/s (1.3 In/s)
Lifting interval:	1260 mm (49.6 in) (height-adjustable)
Sound level:	52.8 dB(A)
Protection class:	IP X4
Operating forces, controls:	Buttons on hand control: 2.4 N Button on display: 4 N
Electrical data:	24 V
Intermittent power:	Int. Op 10/90, active operation max 2 min. Only 10% of a given length of time may be active, but no more than 2 min.
Battery:	NiMH cells, 2.2 Ah. New batteries provided by the supplier.
Battery charger:	CBL20002, built-in, 100-240 V AC, 50-60 Hz, max 600 mA.
Lift motor:	24 V, 8.2 A
Motor for base-width adjustment:	24 V, 5.5 A

The device is intended for use indoors.

Type B, in accordance with the electrical shock protection class.

Class II equipment.

Protected by Patent

Dimensions

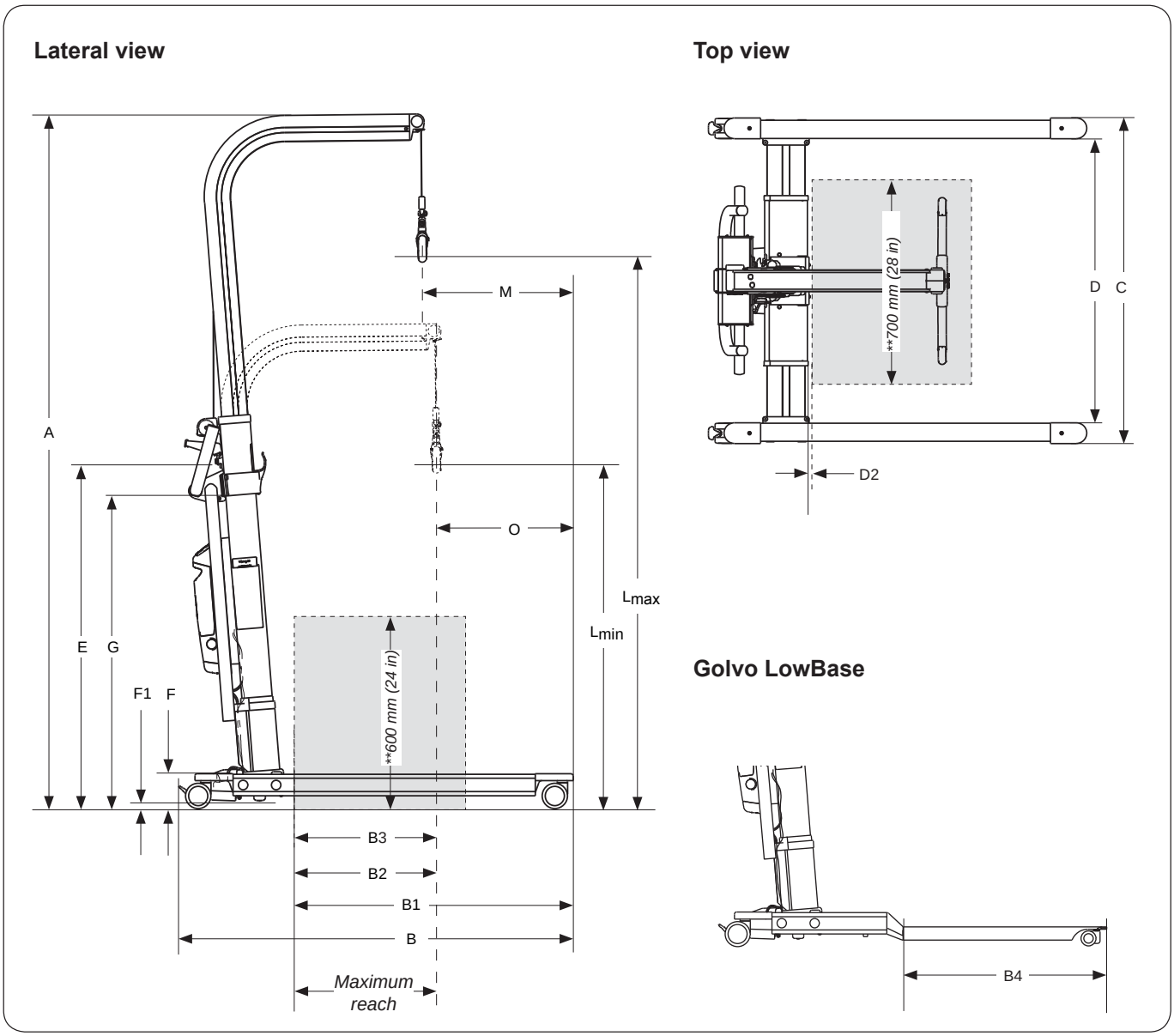

Measurements

Measurements in mm / *in*

Model	A max.	A min.	B	B1	B2	B3*	B4	C max.	C min.	D max.	D min.	D2*	E	F	F1	G	Lmax	Lmin	M	O
Golvo 8000	1995	1360	1115	800	435	435	-	938	654	826	543	0	975	105	25	840	1735	475	440	362
Golvo 8008	2090	1455	1185	870	480	480	-	1020	735	907	623	0	1100	105	25	940	1860	600	436	391
Golvo Low-Base	2090	1455	1185	870	480	480	600	1028	745	907	623	0	1100	60 / 105	22	940	1860	600	436	391

Model	A max.	A min.	B	B1	B2	B3*	B4	C max.	C min.	D max.	D min.	D2*	E	F	F1	G	Lmax	Lmin	M	O
Golvo 8000	*78.5*	*53.5*	*43.9*	*31.5*	*17.1*	*17.1*	-	*36.9*	*25.7*	*32.5*	*21.4*	*0*	*38.4*	*4.1*	*1.0*	*33.0*	*68.3*	*18.7*	*17.3*	*12.8*
Golvo 8008	*82.3*	*57.3*	*46.6*	*34.2*	*18.9*	*18.9*	-	*40.2*	*28.9*	*35.7*	*623*	*0*	*43.3*	*4.1*	*1.0*	*37*	*73.2*	*23.6*	*17.2*	*15.4*
Golvo Low-Base	*82.3*	*57.3*	*46.6*	*34.2*	*18.9*	*18.9*	*23.6*	*40.5*	*29.3*	*35.7*	*623*	*0*	*43.3*	*2.4 / 4.1*	*0.9*	*37*	*73.2*	*23.6*	*17.2*	*15.4*

The lifting interval 1260 mm (49.6 in) is height-adjustable, see p. 9.

Note: When changing to other lifting accessories check that the lift still achieves desired lifting height.

* Reference measurement according to Standard EN ISO 10535:2006

Assembly

Before assembly, make sure you have the following parts and tools:

- Lift mast with control box and hand control, sling bar with latches, 2 M6 screws
- Armrest.
- Base with width adjustment motor.
- Battery.
- Tools: 4, 5 mm Allen keys.
- Bag containing instruction guide, quick reference guide, handle reinforcement for emergency lowering, charger cable, charger connector cable, cable lid with screws (2).

⚠ **Lock the wheels on the base before starting to assemble the lift.**

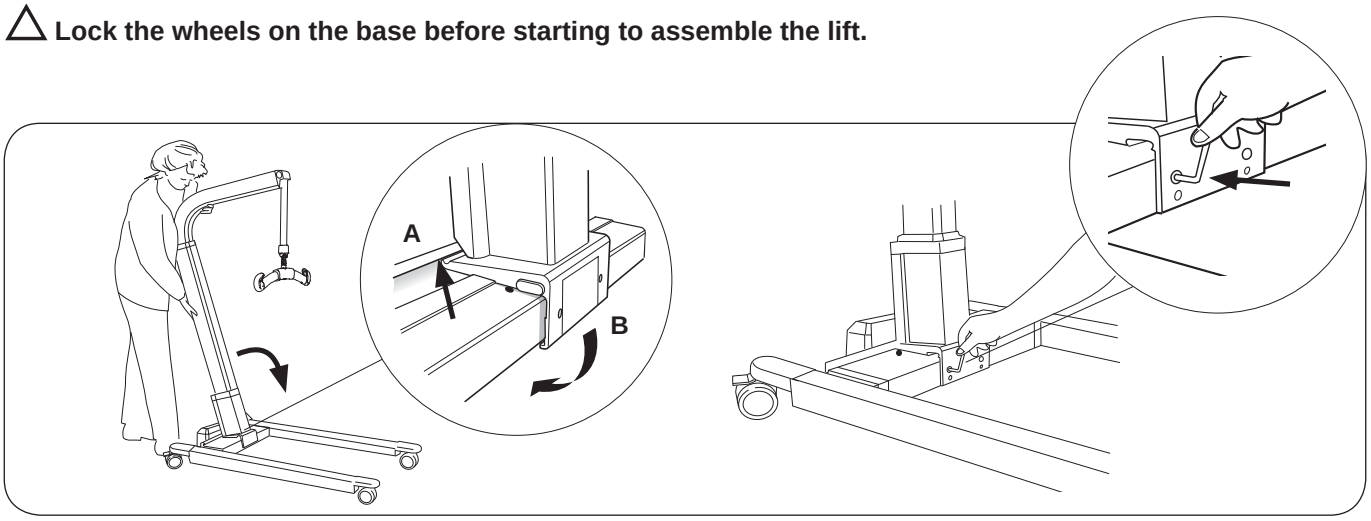

1. Unscrew and remove the transportation guard (metal plate) at the bottom of the lift mast. Remove the transportation guard, its attachment screws and the red information decal.
   A) Position the lift mast between the two black plastic plugs on the base cross member.
   B) Then push the mast forwards as in the figure above so that it hooks onto the cross member.
2. Screw the two provided M6 screws into the upper holes on the lift mast.
   No screws in the lower holes!

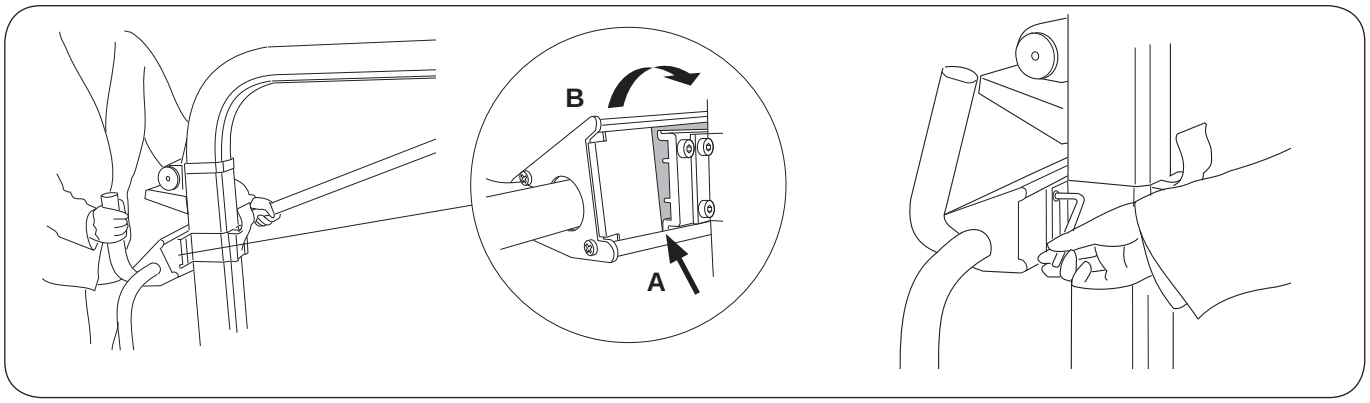

3. A) Place the armrest part in the attachment on the lift mast, starting with the lower groove.
   B) Lower and load the armrest until it hooks onto the upper groove on the armrest part. Do not remove any of the pre-assembled M8 screws completely, but it may be necessary to loosen them.
4. Secure the armrest by tightening the two preassembled M8 screws.

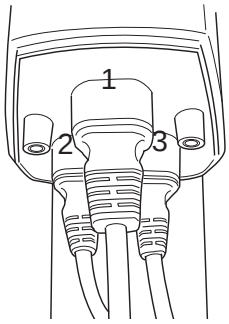

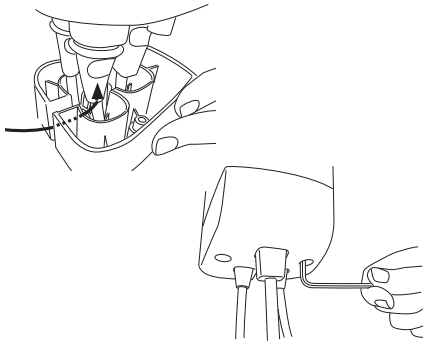

5. Connect the cables as follows:
   - Charger cable to socket 1.
   - Cable from lift motor to socket 2.
   - Cable for motor for base-width adjustment to socket 3.

6. Insert the cables through the opening in the cable lid. Push the lid up and secure with the provided Allen key and screws (2).

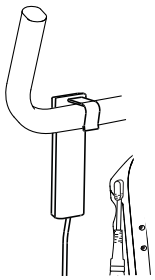

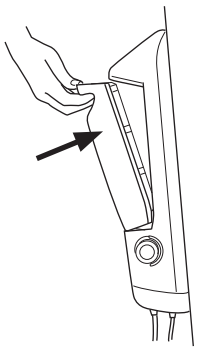

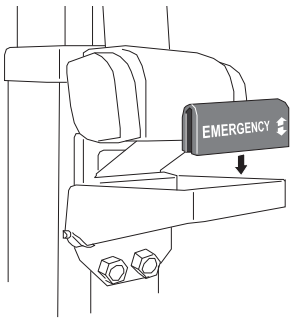

7. Hang the hand control on the handle.

8. Place the battery in its bracket in the control box. Check that the battery is secured in its position.

9. Press the handle reinforcement into place with the text “Emergency lowering” visible on the emergency lowering handle.

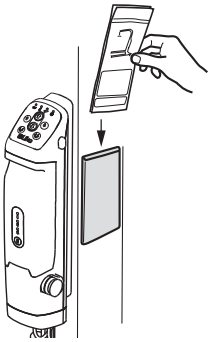

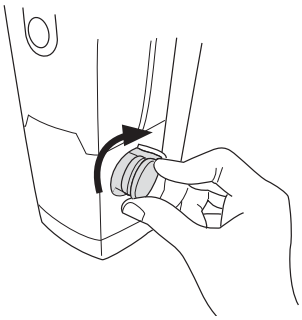

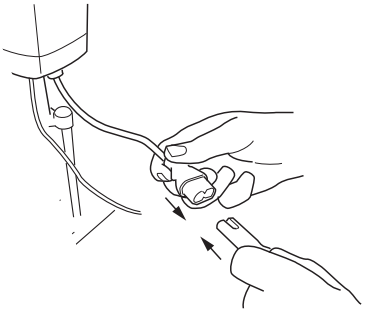

10. Place the quick reference guide in the holder on the lift mast.

11. Release the emergency stop by turning the button in the direction indicated by the arrows on the button.

12. Before initial use, charge the battery by plugging the charger cable into the connector cable. Then plug the charger cable into an electrical socket (100-240 V AC). The battery charges fully in about 5 hours.

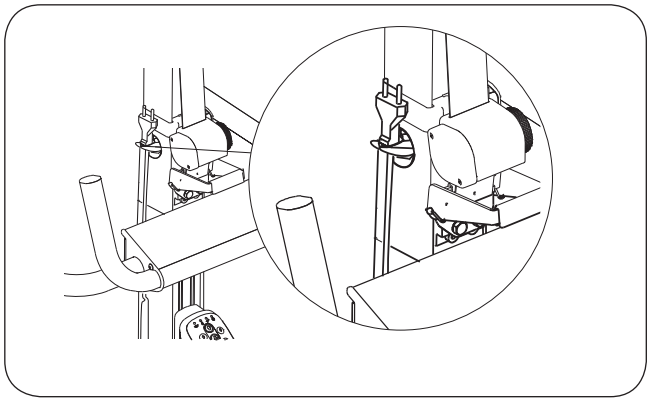

13. Place the charger cable on the hook provided on the mast after completed charging.

After assembly and charging, ensure that:

- The motion of the lift arm corresponds to the buttons on the hand control/operation panel.
- The emergency lowering functions are working (mechanical and electrical).
- The wheel brakes are working.
- The base-width adjustment works.
- The batteries are charged.

Disassembly

1. Begin by removing the sling bar or other accessory that is fitted to the lift.
2. Remove the armrest holder as described below:

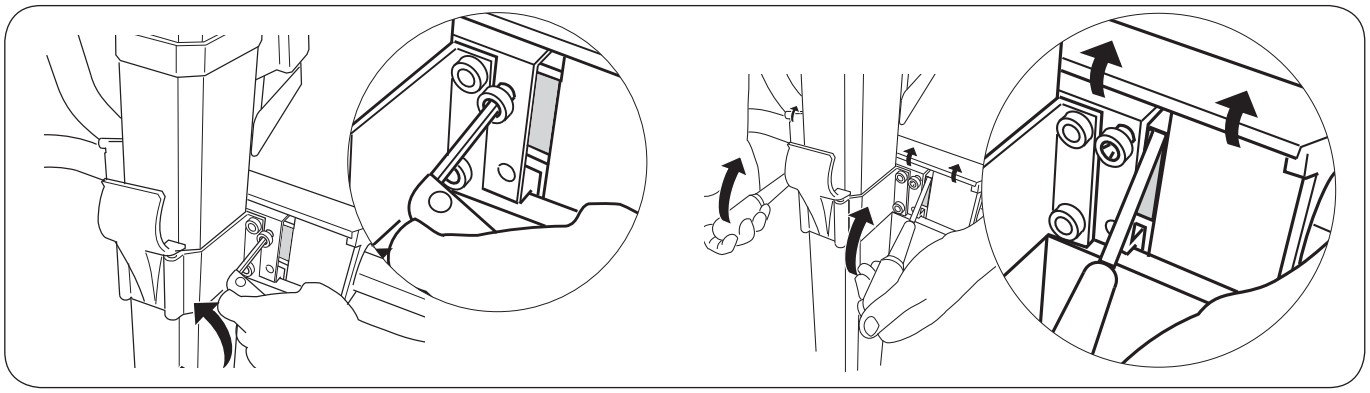

A. Do not remove, just loosen the two M8 screws in the armrest holder on either side of the lift mast.

B. Remove the armrest holder using two screwdrivers. Place screwdrivers inside on top of handlebar and pull up simultaneously as illustrated.

3. Loosen the cables from the control box, see p.6.
4. Remove the mast as described below:

△ **When the mast has been detached from the base, it must be supported to prevent it from falling**.

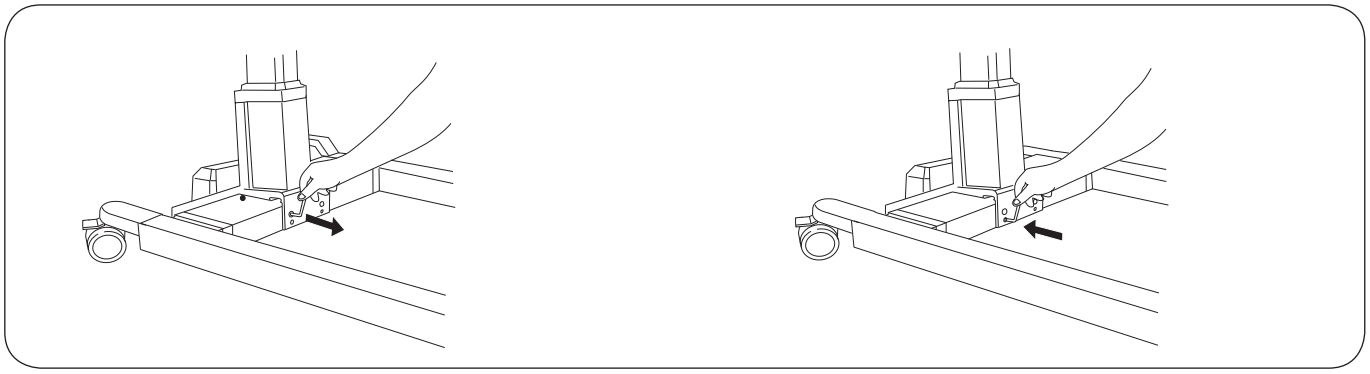

A. Unscrew both the safety screws in the upper holes on the mast.

B. Then screw the safety screws into the lower holes on the lift mast. This releases the mast from the base, and it can now be removed.

Operation

The lift can be operated with the hand control or from the operation panel.

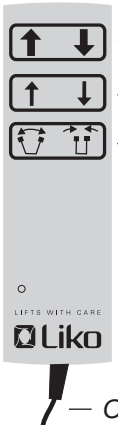

– **Up** / **Down**, adjust the lifting motion

– up / down, (slowly)

– **Out** / **In**, adjust the base width

Up

up, *(slowly)*

Down

down, *(slowly)*

Base wider

Base narrower

Hand Control

The direction of the arrows applies when the hand control is held as shown in the picture. The lifting and base movement stops as soon as the push button is released.

Operation Panel

There are 6 push buttons on the panel.
For the symbols and indicator lights of the operation panel, please see below.

Symbols and indicator lights (Liko Diagnostic System™) on the operation panel:

IR - communication, *(green light)*
- Receives/Sends IR signals.

Overload (orange light)
- Illuminates if the lift's maximum load is exceeded, and the lift stops. The indicator turns off after 3 secs., and the lift operates again.

Service indication (orange light)
- Illuminates when service is needed. Contact the service technician authorized by Liko/Hill-Rom.

Expected Life Time (ELT) (red light)
- When the light flashes during lifting, the Liko Diagnostic System™ indicates that the expected life time for the lift is approaching its end. Contact the service technician authorized by Liko/Hill-Rom.

△ If the ELT light proceeds to shine continuously when lifting, the lift should be taken out of service. Contact the service technician authorized by Liko/Hill-Rom.

Emergency stop

Activate:
Press the red button on the control box.

Reset:
Turn the button in the direction indicated by the arrows on the button.

Locking the Wheels

The rear wheels can be locked to prevent rotating and turning. The locking/unlocking of the wheels is done with the foot.

△ Locked wheels during lifting can increase the risk of tipping.

NOTE: When lifting, the wheels should be unlocked so that the lift can be moved to the patient's centre of gravity. The wheels should be locked, however, if there is a risk of the lift rolling into the patient, for instance, when lifting from the floor.

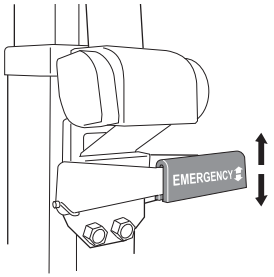

Electrical Emergency Lowering/Raising

Use the arrow buttons on the operation panel (up or down) until the patient being lifted is on a firm surface and the strap loops of the sling can be unhooked.

Mechanical Emergency Lowering

Emergency lower by moving the handle marked “Emergency lowering” up and down. Repeat the motion until the patient being lifted is on a firm surface; draw down the sling bar manually and continue to pump the handle until the sling bar is low enough to enable the sling’s strap loops to be unhooked.

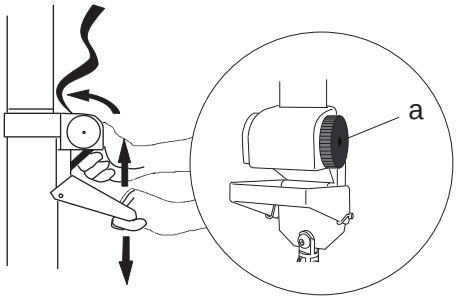

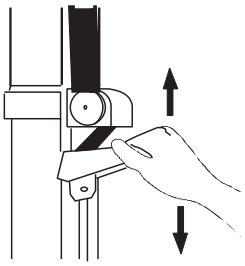

After mechanical emergency lowering / Restoring the lifting level

If the lift strap has been lengthened due to using the emergency lowing function, the lift interval height will be lower than previously. To restore maximum lifting height, the lift strap must be reset to its original length.

Do as follows:

1. Remove any load / weight from the strap above the emergency lowering device. Do this by either placing the sling bar above the lift arm or by another person holding the sling bar up so that the strap hangs loose.
2. Lower and raise the handle marked “Emergency lowering” with your left hand. At the same time tension the strap by turning the black knob (a) clockwise with your right hand. Repeat this procedure until the red mark on the strap is just above the emergency lowering device.

Adjustment of the lift interval level

If it is necessary to reach a lower level with the sling bar, this can be arranged by lengthening the lift strap using the mechanical emergency lowering device. Do not lengthen the strap more than necessary as the highest obtainable lifting level is also affected.

An example of when it would be advantageous to lower the lift interval is when lifting from the floor using a sling whose strap loops do not reach up to the sling bar hooks when the lift is in its lowest position.

Do as follows: Push down the red emergency lowering handle at the same time as loading the sling bar (pull down the sling bar with your other hand). This extends the strap and the sling bar is lowered. Repeat until the required strap length is obtained.

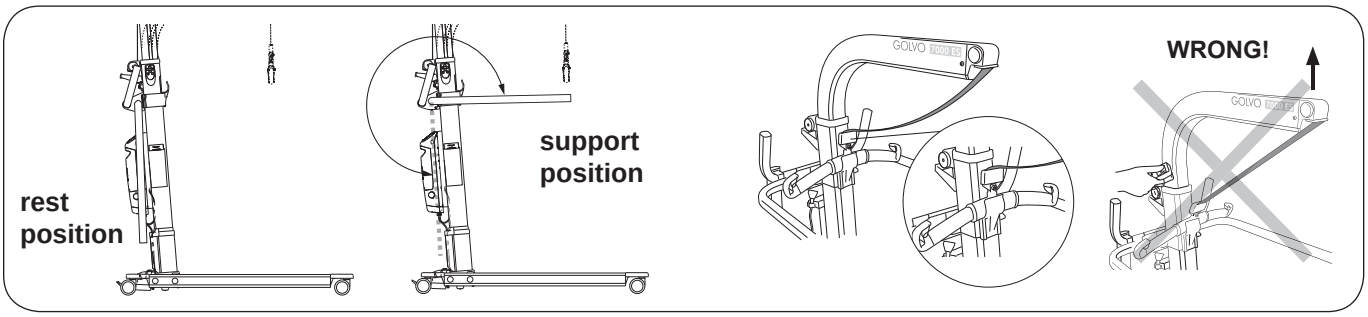

Armrest

To use the armrest you need to rotate it from the (vertical) rest position up to the (horizontal) support position. The armrest have two purposes: to help the patient feel more secure and facilitate for the caregiver when moving the lift.

△ When using the lift to transfer a patient between rooms, the armrest should be set in the support position!

Parking the sling bar

When the lift is not in use or is being moved without a load, it can be beneficial to place the sling bar in the parking panel.

The parking panel is intended for parking Universal SlingBars 350, 450 and 600 (all models).

△ When the sling bar is parked in the parking panel, the lift should not be raised since this could be dangerous and cause personnel injury or damage to the lift if the sling bar should release and swing out from the panel.

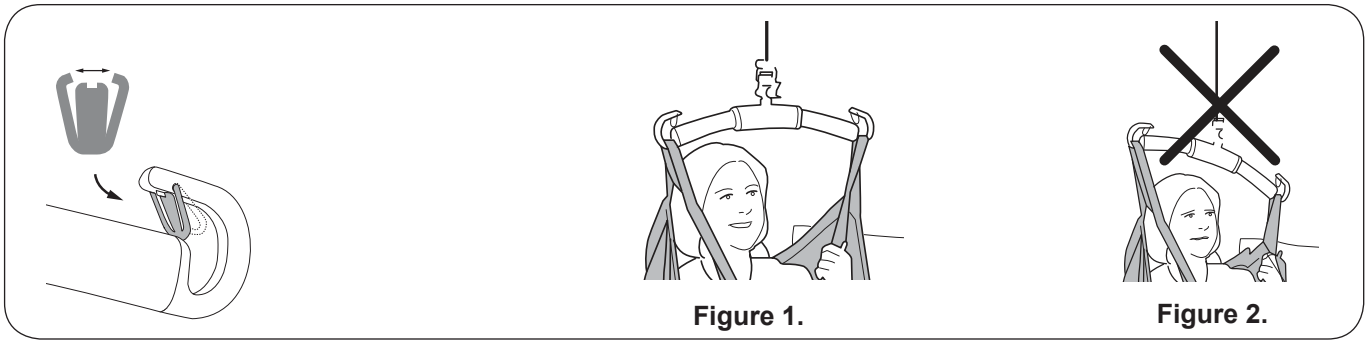

Installation of Latches

After installation, ensure that the spring loaded clip is taut against the sling bar and moves freely in the sling bar hook.

Lift correctly!

Before each lift, make sure that:

– the Sling loops at opposite sides of the Sling are at the same height

– all the Sling loops are fastened securely in to the Sling bar hooks

– the Sling bar is level during the lift, see Figure 1.

△ If Sling bar is not level (see Figure 2), lower the user to a firm surface and adjust according to the Sling in use Instruction Guide.

△ An improper lift can be uncomfortable for the user and cause damage to the lift equipment! (see Figure 2).

Position of the Lift when Lifting

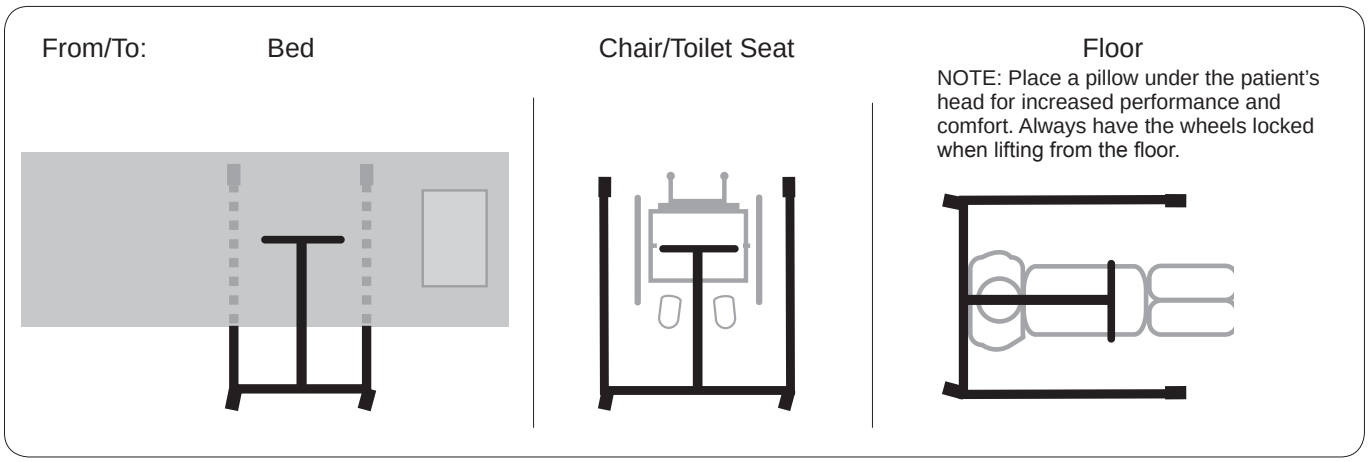

Transfer from car

Ensure that the lift used for car transfers is always stored and charged indoors. Outdoor operation should be kept to a minimum. Using the lift in harsh conditions such as rain, snow or extreme cold may impact the performance of the lift immediately.

Prerequisites

Transfer from car is applicable from the front and rear with the patient in a seated position. The caregiver must assess that transfer from the car is achievable. Considerations should be made regarding the status of the patient (status/condition, height and weight, position and accessibility), the relative size of the car and position of the lift equipment. The ground surface of the transfer area should be level, hard and smooth and free from gravel, debris, ice and potholes. Two caregivers are recommended for this task. A gurney or a wheel chair should be in the immediate vicinity of the car when performing the lift. Recommended slings for car transfer are the Universal Sling (models 000 & 002) and the High Back Sling (models 20/21/25/26). For correct sling application consult the sling instruction guide.

Do as follows:

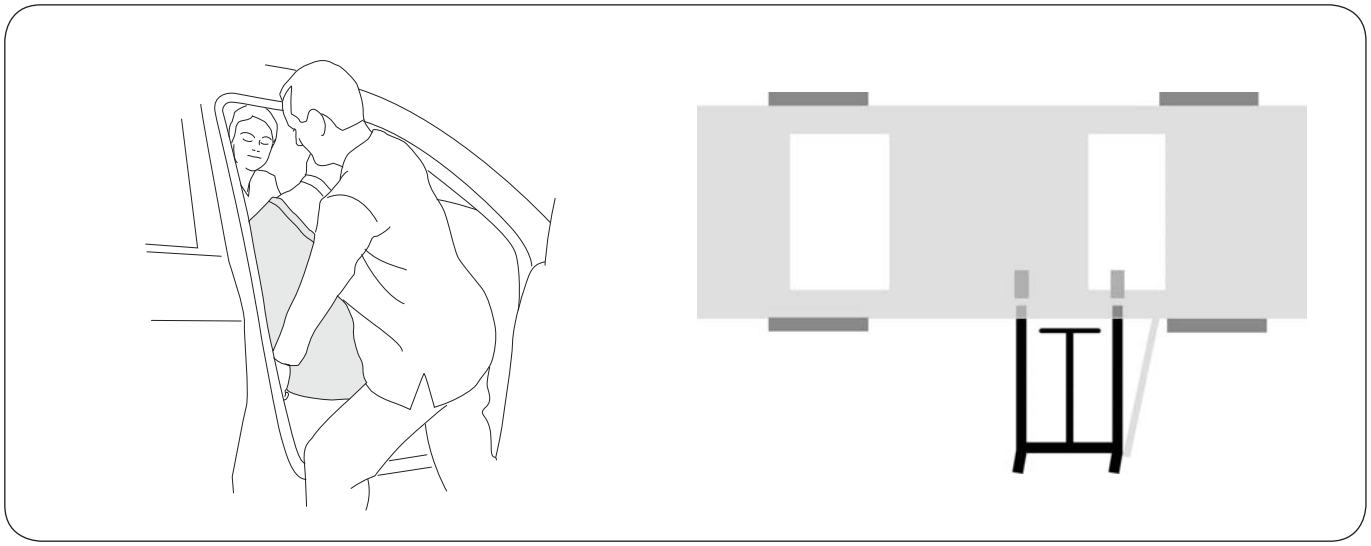

1. Apply the sling according to the sling instruction guide, a HandySheet or Tube can be used to reduce friction. One caregiver may assist from inside the car if necessary.

2. Position the lift as perpendicular as possible to the car, with the car door open. Keep the lift arm outside the car and the wheels of the lift unlocked.

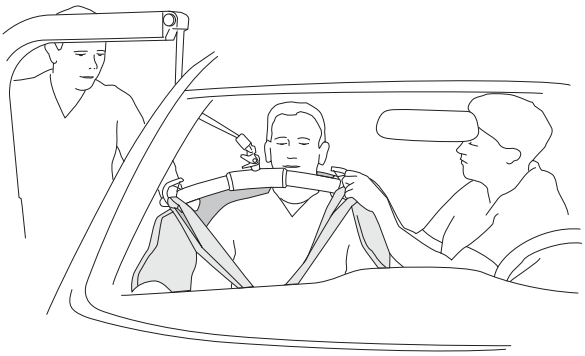

3. Attach sling loops to the sling bar. Ensure the correct application of sling loops to the sling bar. Raise the lift to apply more tension on the sling. Rotate the patient toward the door opening and guide the legs of the patient out of the car. Apply friction reducing devices if necessary.

4a. One caregiver must guide the sling bar and patient out of the car and ensure that the head of the patient is guided safely while exiting the car. The other caregiver will need to raise the lift while simultaneously pulling the lift backwards.

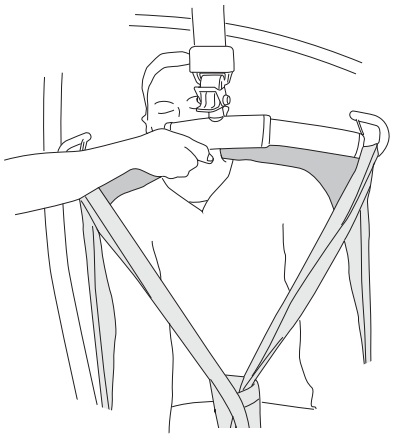

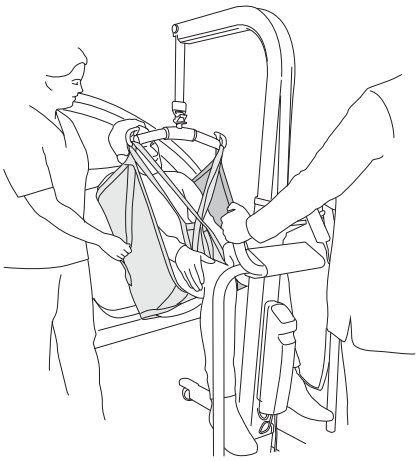

4b. Notice the correct grip on the sling bar to avoid pinch injuries to the caregiver as the sling bar is guided out of the car. Avoid placing hands between the sling bar and the door frame of the car.

5. Removal of the patient from the car is complete, continue the transfer to a wheel chair or gurney.

Charging the Batteries

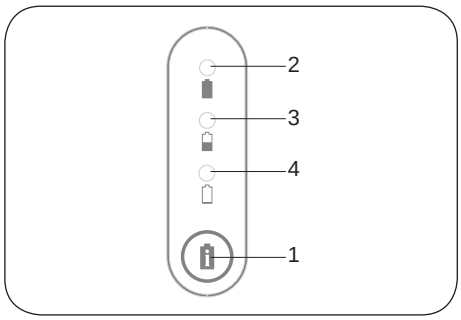

Battery Capacity
Check the battery capacity by pressing the i-button (**1**). The following information can be read:

2 - Green light: More than 50% of the battery capacity remains.
3 - Orange light: 25–50% of the battery capacity remains.
4 - Orange light: 0–25% of the battery capacity remains.

The indication lamps light up for about half a minute; they then go out. The battery capacity is also shown when the lift is in use.

To obtain maximum service life, it is important to charge the batteries regularly. We recommend charging after use of the lift or every night. Maximum charge is obtained after about 5 hours. When the batteries are fully charged, the charger switches to “trickle charging” automatically.

During charging the lights shine alternatively (orange, orange, green). For deeply discharged batteries, the indication for initiated charging can be delayed a few minutes. Completed charging is indicated by a flashing green light. When the operation time is noticeably shortened, the batteries probably need changing. Stop charging and switch batteries.

The lift cannot be charged with the emergency stop engaged.

Never charge batteries in a wet area.

NOTE! If the lift is not to be used for a long period, the battery should be connected to charging.

Charging

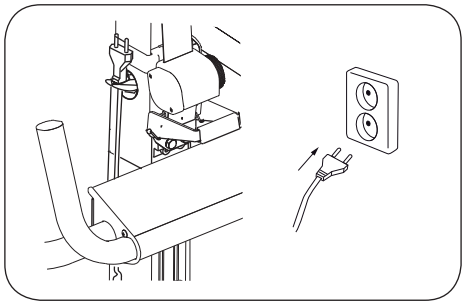

With built-in charger:

Check that the charger cable is connected to the control box outlet; see p. 6.

Connect the charger cable to an electrical outlet (100-240 V AC).

Completed charging is indicated by a flashing green light on the battery.

If the charger cable is permanently stretched, it should be replaced in order to minimize the risk of the cable getting stuck and breaking.

NOTE! The lift cannot be used when the charger cable is plugged into a wall socket.

Old batteries are to be deposited at the nearest recycling station or given to personnel authorized by Liko/Hill-Rom.

Maximum Load

Different maximum loads may apply to different products on the assembled lift unit, sling bar, sling and any other accessories used. For the assembled lift unit, including accessories, the maximum load is always the lowest maximum load rating for any of the components. A Golvo that is approved for 200 kg (440 lbs) can be equipped with a lifting accessory that is approved for 300 kg (660 lbs). In this case, the maximum load of 200 kg (440 lbs.) applies to the assembled lift unit. Study the markings on the lift and lifting accessories or contact your Liko/Hill-Rom representative if you have any questions.

Recommended Lifting Accessories

⚠ **Using lifting accessories other than those approved can entail a risk.**

Generally recommended sling bars and accessories for Golvo mobile lifts are described below.

When changing a sling bar or other lifting accessories, the highest possible lifting height of the lift is affected. Before changing lifting accessories you should always ensure that the lift, after change, can fulfil the desired lifting height in order to manage the lifting situations for which the lift is to be used.

To select suitable slings and other lifting accessories, please see the “Golvo” and “Lifting accessories” brochures. For additional guidance in selecting a sling, study the operating instructions for the respective sling models. There you will also find guidance for combining Liko’s sling bars with Liko’s slings.

Contact your Liko/Hill-Rom representative or visit www.liko.com for advice and information on Liko’s product range.

SlingBar Mini 220
Max. 205 kg (450 lbs)
Prod. no. 3156005

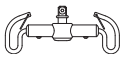

Universal SlingBar 350*
Max. 300 kg (660 lbs)
Prod. No. 3156074

Universal SlingBar 450*
(Standard on Golvo)
Max. 300 kg (660 lbs)
Prod. No. 3156075

Universal SlingBar 600*
Max. 300 kg (660 lbs)
Prod. No. 3156076

Universal TwinBar 670 Twin*
Max. 300 kg (660 lbs)
Prod. No. 3156077

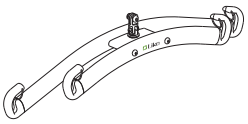

Universal SideBars 450
including bag
Max. 300 kg (660 lbs)
Prod. No. 3156079

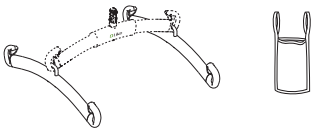

Sling Cross-bar 450*
Max. 300 kg (660 lbs)
Prod. No. 3156021

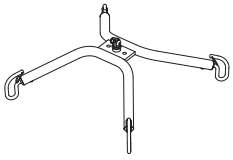

Sling Cross-bar 670*
Max. 300 kg (660 lbs)
Prod. No. 3156018

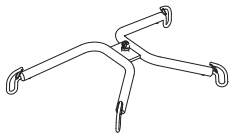

SlingBar Cover Paddy 30
(fits Universal SlingBars 350, 450,
and 600, as well as SlingBar Slim 350)
Prod. No. 3607001

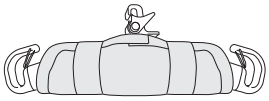

* also available equipped with Quick-Release Hook.

Bag for SlingBars Prod. No. 2001025

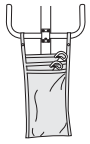

Quick-Release Hook

Liko's Quick-Release Hooks are a system for quick change of lifting accessories on Liko's mobile and stationary lifts. The Golvo must be equipped with Q-link in order to be used with the Quick-release Hook.

The Quick-Release Hook Universal fits the Universal Bars 350, 450 and 600 (prod. no. 3156074 - 3156076). Quick-Release Hook TDM fits the SlingBar Mini 220 (prod. no. 3156005), Sling Cross-bar 450 and 670 (prod. no. 3156021 and 3156018) and Universal TwinBar 670 (prod. no. 3156077).

See the "Guide to Liko's Quick-Release Hook System", which can be downloaded from our website www.liko.com, or contact your Liko/Hill-Rom representative for more information about the advantages and use of the Quick-Release Hook system.

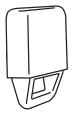

Q-link
Prod. No. 31590005

Quick-Release Hook Universal
Prod. No. 3156508

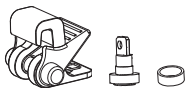

Quick-Release Hook TDM
Prod. No. 3156502

Stretchers

Most stretchers in Liko's product range can be used in combination with Golvo.

Contact your Liko/Hill-Rom representative for more information.

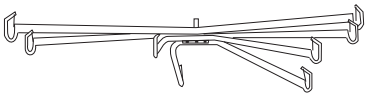

Scale

For weighing patients in combination with Golvo, we recommend using LikoScale 350 Max 350 kg (770 lbs).

LikoScale 350 is certified according to the European Directive NAWI 90/384 (Non-Automatic Weighing Instruments).

Contact your Liko/Hill-Rom representative for more information.

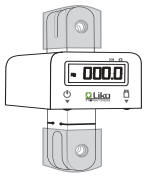

LikoScale 350
Prod. No. 3156228

Support Springs for Jump/Gait Training

Elastic springs are available as an accessory in order to produce a softer, springy motion, for example, during gait training. The springs are available in three different versions:

Long, 28 cm, max 70 kg patient weight/pair:	Prod. No. 3156511
Short, 22 cm, max 70 kg patient weight/pair:	Prod. No. 3156512
Short, 22 cm, max 100 kg patient weight/pair:	Prod. No. 3156513

See the instruction guides for Liko MasterVest, models 60 and 64 or Liko LiftPants model 92, for more information.

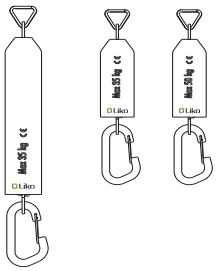

Leg Protector

Leg Protector Golvo 7000, grey, pair — Prod. No. 2006011G
Leg Protector Golvo 7007, grey, pair — Prod. No. 2006012G

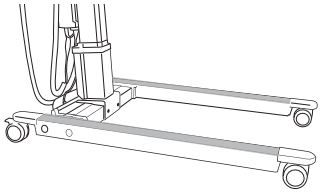

Wall-mounted Battery Charger — Prod. No. 2004108

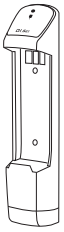

Extra battery — Prod. No. 2006107

Simple Troubleshooting

The lift cannot be operated with the hand control.

1. Check that the emergency stop button has not been pressed.
2. Check the battery capacity.
3. Check that the charger cable is not connected to an electric outlet.
4. Check that the hand control cable is correctly connected.
5. If the lift works via the operation panel, change the Hand Control.
6. *If the problem persists, please contact Liko/Hill-Rom.*

The lift does not work up/down with the operation panel.
The base-width adjustment doesn't work (in/out) with the operation panel.

1. Check that the emergency stop button has not been pressed.
2. Check that the cables to the control box are connected correctly.
3. Check that the charger cable is not connected to an electric outlet.
4. Check the battery capacity.
5. *If the problem persists, please contact Liko/Hill-Rom.*

The charger doesn't work.

1. Check that the emergency stop button has not been pressed.
2. Check that the charger cables are connected correctly.
3. Make sure that the battery is properly attached.
4. *If the problem persists, please contact Liko/Hill-Rom.*

The lift is stuck in the high position.

1. Check that the emergency stop button has not been pressed.
2. Check the battery capacity.
3. Check that the hand control cable is connected correctly.
4. Electrical emergency lowering, use the operation panel to lower the patient onto a firm surface.
5. Use the mechanical emergency lowering device to lower the patient onto a firm surface.
6. *If the problem persists, please contact Liko/Hill-Rom.*

The lift does not reach maximum lifting height.

1. Check that the lifting interval level is correctly set.
2. *If the problem persists, please contact Liko/Hill-Rom.*

If any noises are heard.

Contact Liko/Hill-Rom.

Inspection and Maintenance

Care and Maintenance

For trouble-free use, certain details should be checked each day the lift is used:

- Inspect the lift and check to make sure that there is no external damage.
- Check the sling bar attachment.
- Check the lift strap for wear and to ensure the strap is not twisted.
- Check the functionality of the latches.
- Check the integrity of the lifting motion and the base-width adjustment.
- Check that the lifting interval level is set correctly and that the emergency lowering is working as it should (both the electrical and the mechanical).
- Charge the batteries each day the lift is used and make sure the charger works.

When necessary, clean the lift with a moist cloth and check that the wheels are free from dirt. Find more detailed information regarding cleaning and disinfection of your Liko/Hill-Rom product in the document *Care and Maintenance* at our website: www.liko.com.

⚠ **The lift should not be exposed to running water.**

Service

A periodic inspection of the lift should be carried out at least once per year.

⚠ **Periodic inspection, repair and maintenance may be performed only in accordance with the Liko service manual by personnel authorized by Liko/ Hill-Rom and using original Liko spare parts.**

Service Agreement

Liko/ Hill-Rom offers the opportunity to enter into service contracts for the maintenance and regular inspection of your Liko/ Hill-Rom product.

Expected Life Time

The product has an expected service life of 10 years when correctly handled, serviced and periodically inspected in accordance with Liko's instructions.

Transport and Storage

During transportation, or when the lift is not to be used for a long time, the emergency stop should be engaged. The environment where the lift is transported and stored should have a temperature of 10°C to 40°C (50–104°F) and a relative humidity of 30% to 75%. The air pressure should be 700–1060 hPa.

Recycling

For instructions on how to recycle your Liko/ Hill-Rom product, please visit our website: www.liko.com.

Product Changes

Liko products undergo continuous development, which is why we reserve the right to make product changes without prior notice. Contact your Liko/Hill-Rom representative for advice and information about product upgrades.

Design and Quality by Liko in Sweden

Hill-Rom´s Management system are certified in accordance with ISO 9001 and its equivalent for the medical device industry, ISO 13485. Hill-Rom´s Management system is also certified in accordance with environmental standard ISO 14001.

© Copyright Liko AB 2014 June

Liko
A Hill-Rom Company

www.liko.com

Manufacturer:

Liko AB
Nedre vägen 100
SE-975 92 Luleå
Sweden